Hydraulink

ADAPTORS

SB-C-90

BSP MALE X BSP FEMALE
BSP 60° CONE MALE X BSP 60° CONE FEMALE
SWIVEL NUT 90° ELBOW

- ISO 8434-6

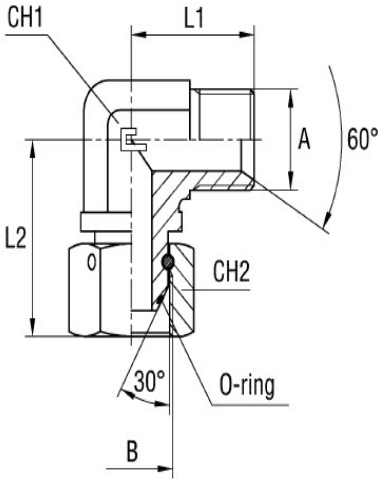

Part Number	BSPP Male Thread (A)	BSPP Female Thread (B)	L1 - mm	L2 - mm	Hex A/F (CH1)	Hex A/F (CH2)
SB-C-90-0404	1/4-19	1/4-19	26	33	14	19
SB-C-90-1212	3/4-14	3/4-14	41	54	27	32

Please contact Hydraulink for further details and availability. Hydraulink reserve the right to change technical specifications without notice.